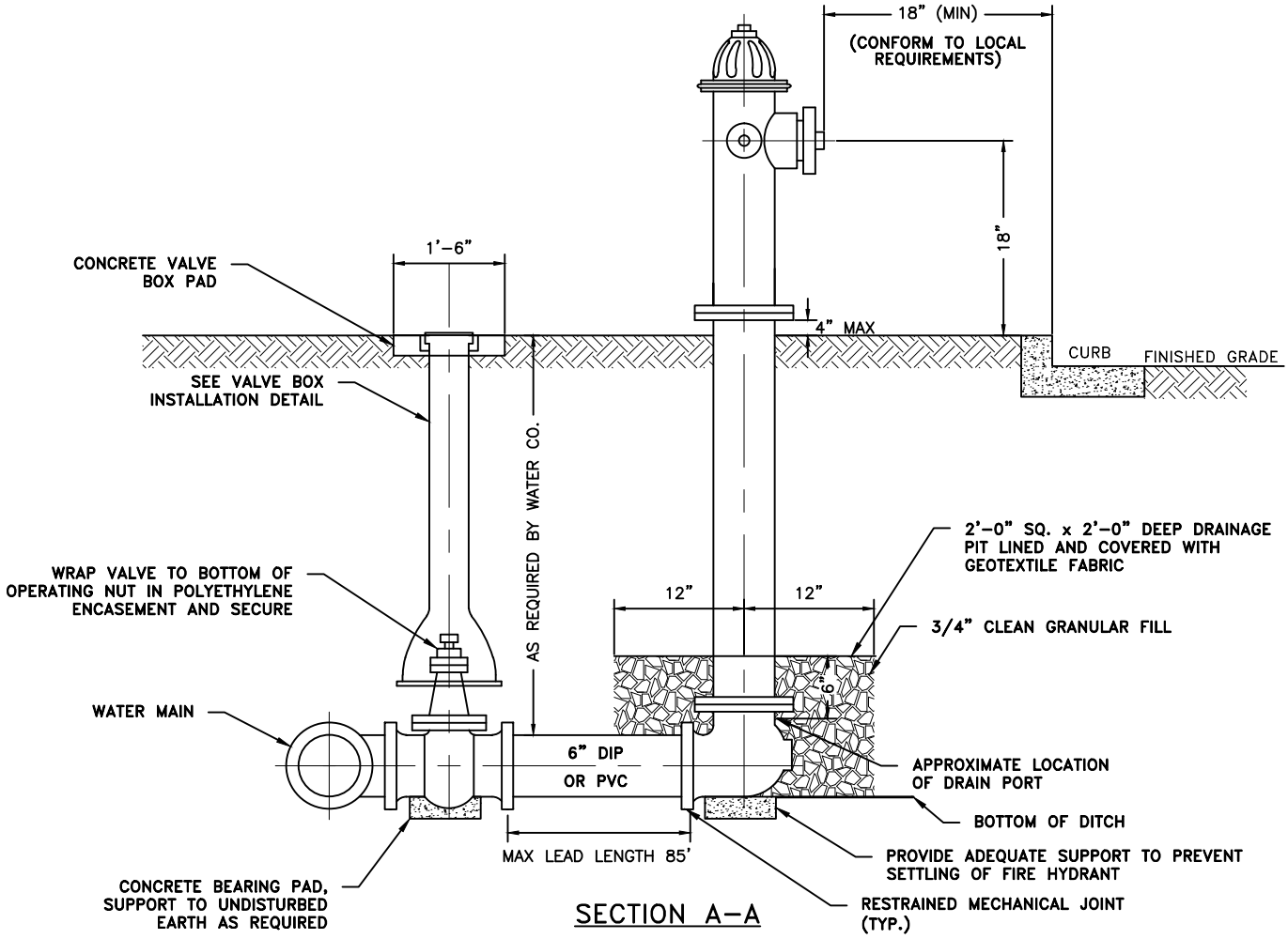

SECTION A-A

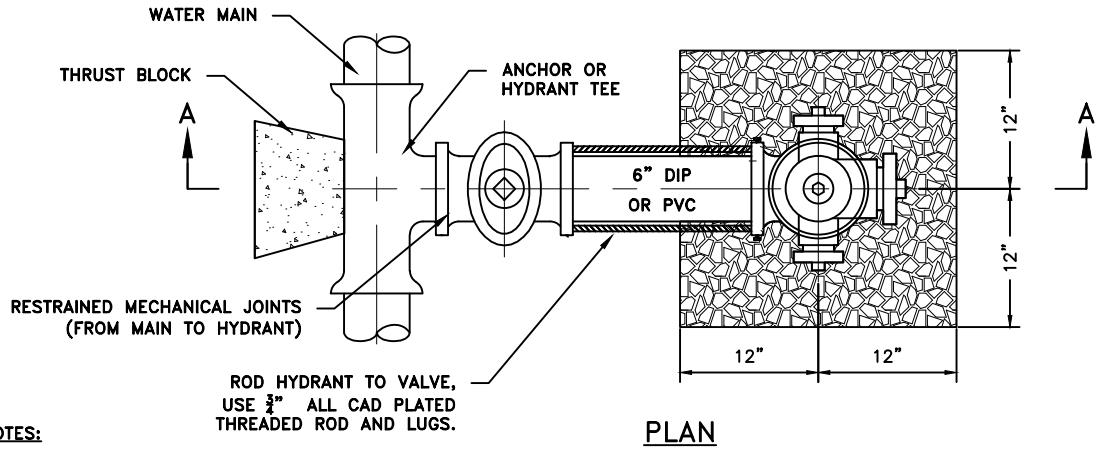

PLAN

NOTES:

1. ALL HYDRANTS SHALL STAND PLUMB AND SHALL HAVE THE PUMPER NOZZLE FACING THE CURB.
2. HYDRANT BONNETS SHALL BE PAINTED TO INDICATE AVAILABLE FIRE FLOW IN ACCORDANCE WITH AMERICAN WATER SPECIFICATIONS.
3. IF HYDRANT LATERAL IS NOT RESTRAINED, CONTRACTOR SHALL PROVIDE A THRUST BLOCK BEHIND HYDRANT SHOE.
4. RESTRAIN ALL JOINTS ON HYDRANT TEE, HYDRANT VALVE, AND HYDRANT LEAD.
5. AMERICAN WATER RESERVES THE RIGHT TO WAIVE STRICT COMPLIANCE WITH THIS DETAIL IN THE EVENT THAT FIELD CONDITIONS OR O&M WORK REQUIRE A WAIVER.

FIRE HYDRANT

REVISIONS
6/13 – MSG EDITS
1/16 – MSG EDITS

AMERICAN WATER MILITARY SERVICES GROUP
CIVIL
FIRE HYDRANT
DETAIL

AMERICAN WATER MILITARY SERVICES GROUP
CAMDEN, NJ 08102

AMERICAN WATER M.S.G.
1 WATER STREET
CAMDEN, NJ 08102

AMERICAN WATER®

DRAWN BY Z. ALAM
PROJECT ENG'R PDK
APPROVED

DATE 05-03-2010
PROJECT N/A

USE DIMENSIONS ONLY
SCALE N.T.S.

USE APPROVED DRAWINGS ONLY FOR CONSTRUCTION PURPOSES

MSG-W-07

FINAL